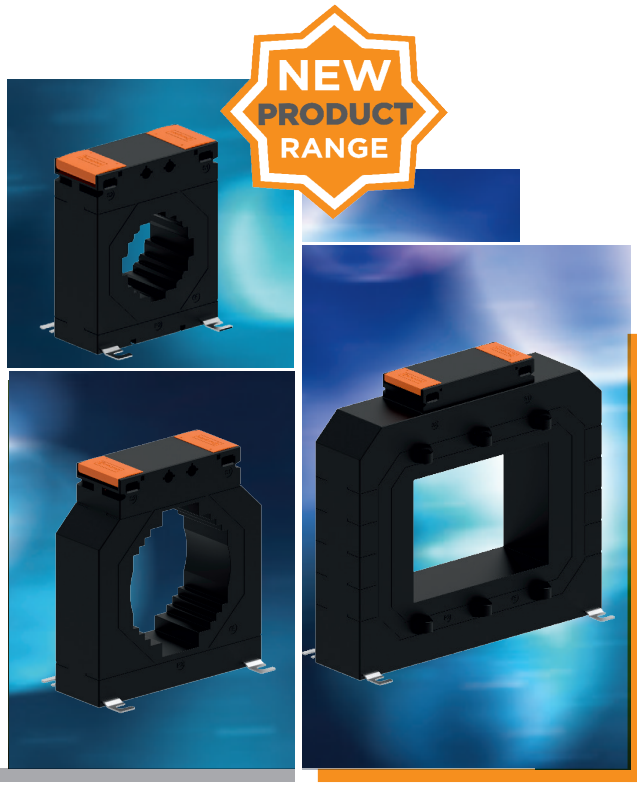

EXCEL PROTECTION CURRENT TRANSFORMERS

TE'S CROMPTON INSTRUMENTS

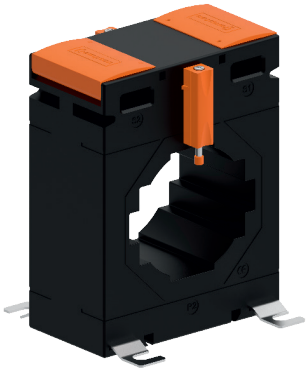

FEATURES

Current ratings from 50 – 6000 Amps

- 5A & 1A Secondaries
- Comprehensive range of protectionclass accuracy's
- Cost effective moulded case
- Wide range of system current ratings,busbar sizes, case dimensions & apertures
- Wall, cable, busbar & DIN rail mounting
- Hinged terminal covers

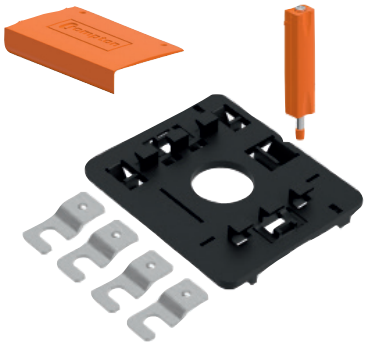

BENEFITS

- Wide range of apertures and case sizes
- Reduction of high currents for ease of metering
- Long product life

APPROVALS

- IEC 61869-2
- BS3938

EXCEL PROTECTION CURRENT TRANSFORMERS

TE's Crompton Instruments Ebony Excel range of Protection Current Transformers offer wide system current ratings, apertures, busbar and case sizes to suit every application. Manufactured to meet IEC61869-2, the range benefits include primary currents ranging from 50 to 6000 Amps, a comprehensive range of protection class accuracies, hinged wire sealable terminal covers for safety and multiple mounting options.

CONSTRUCTION

The toroidal core and secondary winding is encapsulated with UL94V-0 approved polycarbonate, in moulded case providing excellent mechanical strength and electrical insulation.

INSTALLATION OPTIONS

- Plug-in metal feet for wall or base mounting
- Moulded busbar mounting
- Primary copper busbar mounting
- Multi busbar mounting for two busbars
- Plastic DIN-rail adaptor for DIN-rail mounting (available as an option on selected models)

SPECIFICATION

Applicable Standards	IEC-61869-1&2 / IEC- 60044 -1, BS 3938, IS 2705 -1,2&3.
Case	Unfilled polycarbonate, flame retardant grades classified UL 94V-0
Connection	Two connection on each side. M4 screws with self lifting clamp strap assembly
Insulation Class	E (120°C max)
System Voltage	720V maximum
Test Voltage	For Ring (Window) type CT : 4KV 50 Hz for 1 min
Operating Frequency	50Hz / 60 Hz
Rated primary rating	100 A to 6000 A
Rated secondary output	5A standard (1A on request)
Rated burden	1, 1.25, 1.5, 2.5, 3.75, 5, 7.5, 10, 12.5, 15, 20 VA
Class of accuracy	5P & 10P
Ambient temperature	-25°C to +40°C
Storage temperature	-50°C...+80°C
Thermal short circuit current (Ith)	60xIn for Bus Bar type CT.
Dynamic short circuit current (Idyn)	2.5xIth
Accuracy Limit Factor (ALF):	5, 10

ACCURACY CLASSES

The Ebony Excel Protection CT range includes a comprehensive range of protection class accuracies 5P5, 10P5, 5P10 & 10P10.

XLPR3A MODEL

Case size: 62 mm wide x 40 mm deep x 78 mm high
Aperture: Ø 22.5 mm
Primary Rating: 100 - 300A
Secondary Rating: 5A as below, 1A Ratio's available.
Change part number to include 1A e.g. XLPR3A-100/1A-10P5

Model type	Primary current	Accuracy	
		5P5	10P5
XLPR3A-100/5A-**	100A	-	1VA
XLPR3A-125/5A-**	125A	1VA	1VA
XLPR3A-150/5A-**	150A	1VA	1VA
XLPR3A-200/5A-**	200A	1VA	1VA
XLPR3A-250/5A-**	250A	1VA	1VA
XLPR3A-300/5A-**	300A	1VA	1.5VA

-**Add class code to complete part number e.g. XLPR3A-100/5A-10P5

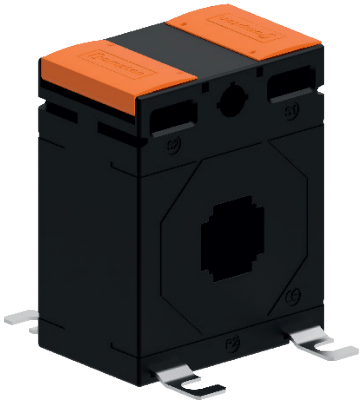

XLPR3B MODEL

Case size: 62 mm wide x 40 mm deep x 78 mm high
Aperture: 20.5 x 12.5 mm - 15.5 x 15.5 mm
Primary Rating: 100 - 200A
Secondary Rating: 5A as below, 1A Ratio's available.
Change part number to include 1A e.g. XLPR3A-100/1A-10P5

Model type	Primary current	Accuracy	
		5P5	10P5
XLPR3B-100/5A-**	100A	-	1VA
XLPR3B-125/5A-**	125A	1VA	1VA
XLPR3B-150/5A-**	150A	1VA	1VA
XLPR3B-200/5A-**	200A	1VA	1VA

-**Add class code to complete part number e.g. XLPR3A-100/5A-10P5

XLPR3A

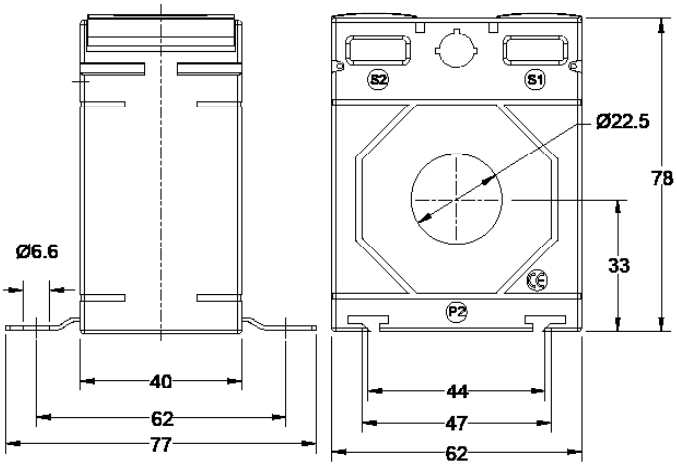

XLPR3B

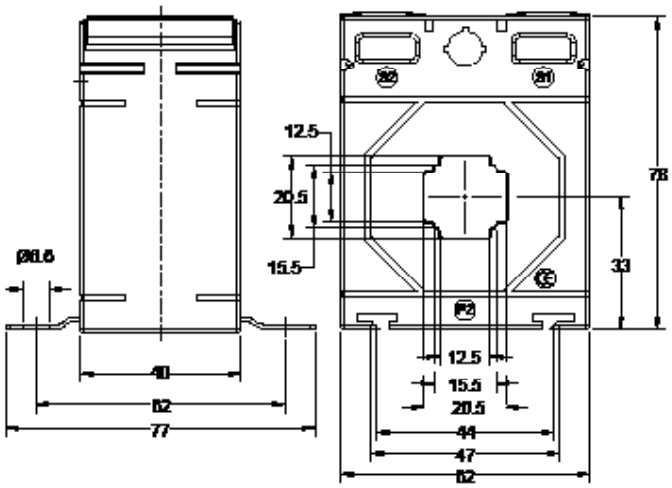

Busbar and Mounting feet fixings are supplied as standard.
DIN Rail Mounting Adapters available - Part Number XL-DRBRK-3

XLPR4A MODEL

Case size: 74 mm wide x 45 mm deep x 98 mm high
Aperture: 21 x 11 mm - 15.5 X 15.5 mm- Ø 20.4 mm
Primary Rating: 200 - 400A
Secondary Rating: 5A as below, 1A Ratio's available.
Change part number to include 1A e.g. XLPR3A-100/1A-10P5

Model type	Primary current	Accuracy	
		5P5	10P5
XLPR4A-200/5A-**	200A	2.5VA	2.5VA
XLPR4A-250/5A-**	250A	2.5VA	2.5VA
XLPR4A-300/5A-**	300A	2.5VA	2.5VA
XLPR4A-400/5A-**	400A	2.5VA	2.5VA

-**Add class code to complete part number e.g. XLPR3A-100/5A-10P5

XLPR4C MODEL

Case size: 74 mm wide x 45 mm deep x 98 mm high
Aperture: 41 x 12.5 mm - 31 x 31 mm - Ø 35 mm
Primary Rating: 120 - 750A
Secondary Rating: 5A as below, 1A Ratio's available.
Change part number to include 1A e.g. XLPR3A-100/1A-10P5

Model type	Primary current	Accuracy	
		5P5	10P5
XLPR4C-120/5A-**	120A	1VA	1VA
XLPR4C-125/5A-**	125A	1VA	1VA
XLPR4C-150/5A-**	150A	1VA	1.5VA
XLPR4C-200/5A-**	200A	1.5VA	1.5VA
XLPR4C-250/5A-**	250A	1.5VA	1.5VA
XLPR4C-300/5A-**	300A	1.5VA	1.5VA
XLPR4C-400/5A-**	400A	1.5VA	1.5VA
XLPR4C-500/5A-**	500A	1.5VA	1.5VA
XLPR4C-600/5A-**	600A	1.5VA	1.5VA
XLPR4C-750/5A-**	750A	1.5VA	2.5VA

-**Add class code to complete part number e.g. XLPR3A-100/5A-10P5

XLPR4A

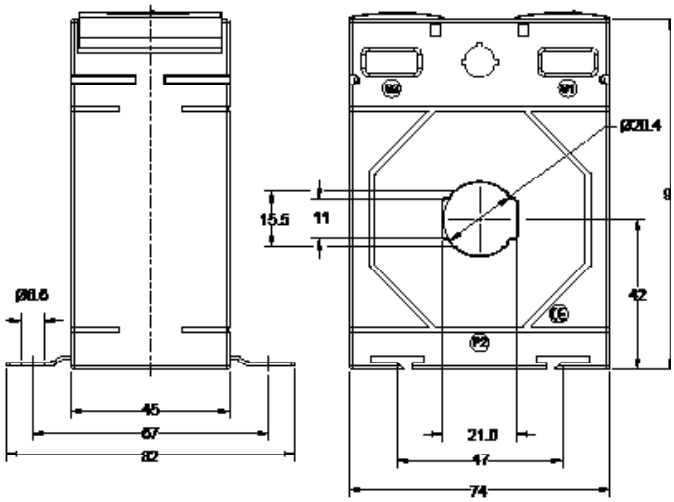

XLPR4C

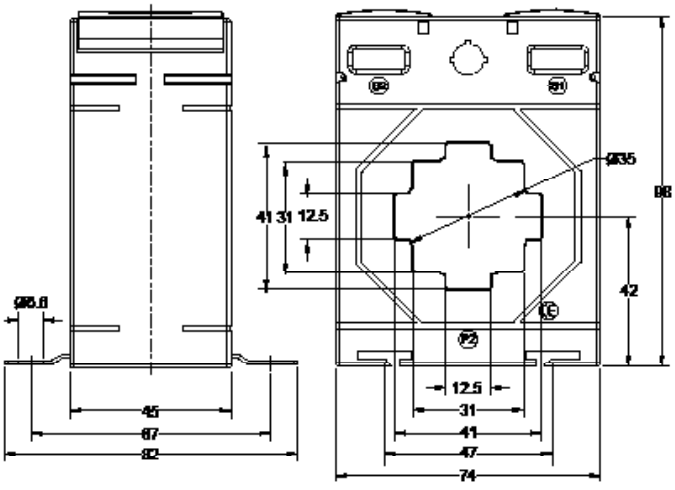

Busbar and Mounting feet fixings are supplied as standard.
DIN Rail Mounting Adapters available - Part Number XL-DRBRK-3

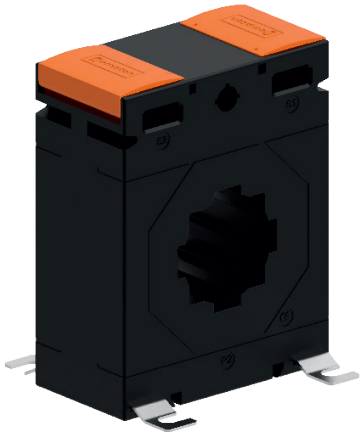

XLPR5A MODEL

Case size: 86 mm wide x 45 mm deep x 110 mm high
Aperture: 41 x 11 mm - 31 x 31 mm - Ø 36 mm diameter
Primary Rating: 100 - 600A
Secondary Rating: 5A as below, 1A Ratio's available.
Change part number to include 1A e.g. XLPR3A-100/1A-10P5

Model type	Primary current	Accuracy			
		5P5	10P5	5P10	10P10
XLPR5A-100/5A-**	100A	1.5VA	1.5VA	-	-
XLPR5A-120/5A-**	120A	1.5VA	1.5VA	-	-
XLPR5A-125/5A-**	125A	1.5VA	2.5VA	-	-
XLPR5A-150/5A-**	150A	2.5VA	2.5VA	-	-
XLPR5A-200/5A-**	200A	2.5VA	2.5VA	-	-
XLPR5A-250/5A-**	250A	2.5VA	2.5VA	-	-
XLPR5A-300/5A-**	300A	3.75VA	3.75VA	1VA	1VA
XLPR5A-400/5A-**	400A	5VA	5VA	1.25VA	1.25VA
XLPR5A-500/5A-**	500A	5VA	6.25VA	1.5VA	1.5VA
XLPR5A-600/5A-**	600A	6.25VA	7.5VA	1.5VA	1.5VA

-**Add class code to complete part number e.g. XLPR3A-100/5A-10P5

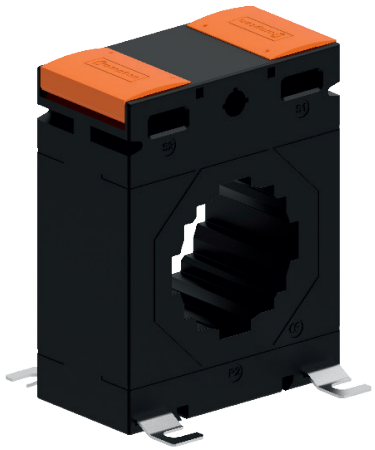

XLPR5B MODEL

Case size: 86 mm wide x 45 mm deep x 110 mm high
Aperture: 51 x 12.5 mm - 41 x 31 mm - Ø 46 mm
Primary Rating: 100 - 800A
Secondary Rating: 5A as below, 1A Ratio's available.
Change part number to include 1A e.g. XLPR3A-100/1A-10P5

Model type	Primary current	Accuracy			
		5P5	10P5	5P10	10P10
XLPR5B-100/5A-**	100A	1.5VA	1.5VA	-	-
XLPR5B-150/5A-**	150A	1.75VA	1.75VA	-	-
XLPR5B-200/5A-**	200A	2.5VA	2.5VA	-	-
XLPR5B-250/5A-**	250A	3.75VA	3.75VA	-	-
XLPR5B-300/5A-**	300A	3.75VA	3.75VA	1VA	1VA
XLPR5B-400/5A-**	400A	5VA	5VA	1VA	1VA
XLPR5B-500/5A-**	500A	5VA	5VA	1VA	1VA
XLPR5B-600/5A-**	600A	5VA	5VA	1VA	1VA
XLPR5B-750/5A-**	750A	7.5VA	7.5VA	1.5VA	1.5VA
XLPR5B-800/5A-**	800A	7.5VA	7.5VA	1.5VA	1.5VA

-**Add class code to complete part number e.g. XLPR3A-100/5A-10P5

XLPR5A

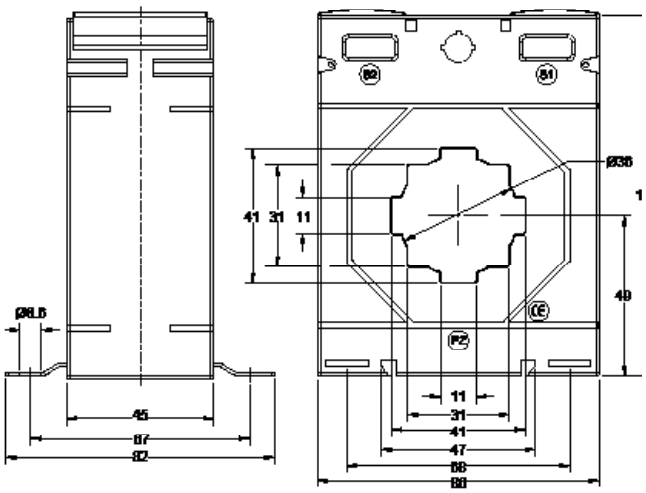

XLPR5B

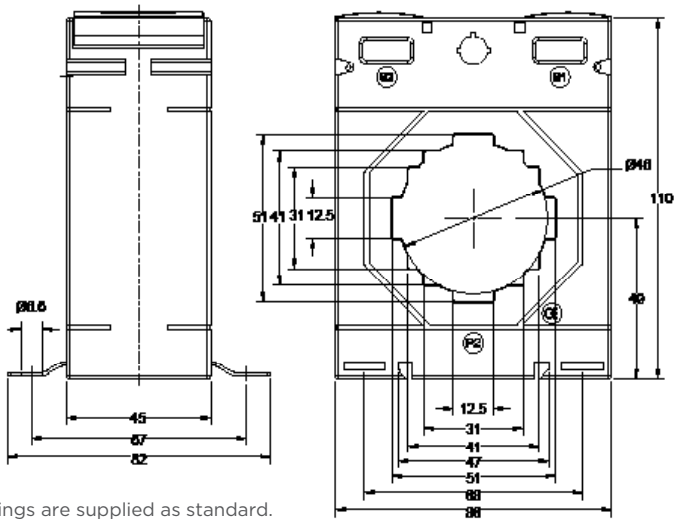

Busbar and Mounting feet fixings are supplied as standard.
DIN Rail Mounting Adapters available - Part Number XL-DRBRK-3

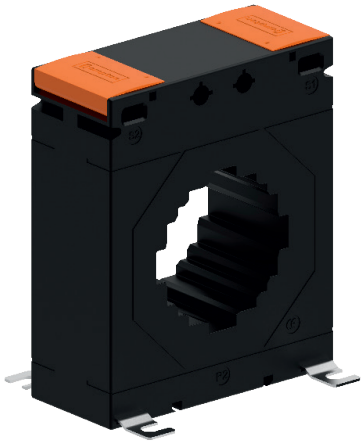

XLPR7A MODEL

Case size: 104 mm wide x 45 mm deep x 126 mm high
Aperture: 61 x 12.5 mm - 51 x 31 mm - 41 x 41 mm - Ø 54 mm
Primary Rating: 100 - 800A
Secondary Rating: 5A as below, 1A Ratio's available.
Change part number to include 1A e.g. XLPR3A-100/1A-10P5

Model type	Primary current	Accuracy			
		5P5	10P5	5P10	10P10
XLPR7A-100/5A-**	100A	1.5VA	1.5VA	-	-
XLPR7A-150/5A-**	150A	2.5VA	2.5VA	1VA	1VA
XLPR7A-200/5A-**	200A	3.75VA	3.75VA	1VA	1VA
XLPR7A-250/5A-**	250A	5VA	5VA	1.5VA	1.5VA
XLPR7A-300/5A-**	300A	5VA	5VA	1.75VA	1.75VA
XLPR7A-400/5A-**	400A	7.5VA	7.5VA	1.75VA	1.75VA
XLPR7A-500/5A-**	500A	7.5VA	7.5VA	1.75VA	1.75VA
XLPR7A-600/5A-**	600A	7.5VA	7.5VA	1.75VA	1.75VA
XLPR7A-750/5A-**	750A	10VA	10VA	1.75VA	1.75VA
XLPR7A-800/5A-**	800A	10VA	10VA	1.75VA	1.75VA

-**Add class code to complete part number e.g. XLPR3A-100/5A-10P5

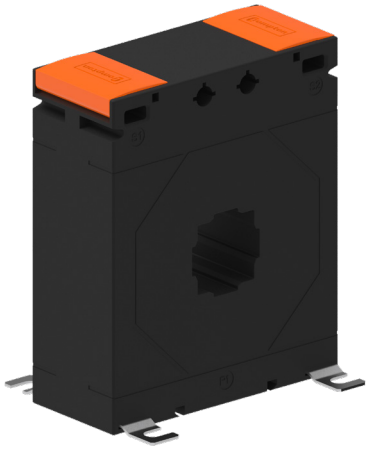

XLPR7D MODEL

Case size: 104 mm wide x 45 mm deep x 126 mm high
Aperture: 31 x 11 mm, 26 x 26 mm - Ø 30 mm
Primary Rating: 50 - 600A
Secondary Rating: 5A as below, 1A Ratio's available.
Change part number to include 1A e.g. XLPR3A-100/1A-10P5

Model type	Primary current	Accuracy					
		5P5	10P5	5P10	10P10	5P20 (5A/1A)	10P20 (5A/1A)
XLPR7D-50/5A-**	50A	2.5VA	2.5VA	-	-	-	-
XLPR7D-60/5A-**	60A	2.5VA	2.5VA	-	1.5VA	-	-
XLPR7D-75/5A-**	75A	2.5VA	2.5VA	-	1.5VA	-	-
XLPR7D-80/5A-**	80A	2.5VA	2.5VA	1.5VA	1.5VA	-	-
XLPR7D-100/5A-**	100A	5VA	5VA	1.5VA	2.5VA	-	-
XLPR7D-125/5A-**	125A	5VA	5VA	1.5VA	2.5VA	-	-
XLPR7D-150/5A-**	150A	7.5VA	7.5VA	2.5VA	2.5VA	-	-
XLPR7D-200/5A-**	200A	10VA	10VA	3.75VA	3.75VA	-	-
XLPR7D-250/5A-**	250A	10VA	10VA	5VA	5VA	1VA / 1VA	1VA / 1VA
XLPR7D-300/5A-**	300A	10VA	10VA	5VA	5VA	1VA / 1.25VA	1VA / 1.25VA
XLPR7D-400/5A-**	400A	15VA	15VA	5VA	5VA	1.25VA / 1.75VA	1.25VA / 1.75VA
XLPR7D-500/5A-**	500A	15VA	15VA	7.5VA	7.5VA	1.25VA / 1.75VA	1.25VA / 1.75VA
XLPR7D-600/5A-**	600A	15VA	15VA	7.5VA	10VA	1.75VA / 2.5VA	1.75VA / 2.5VA

-**Add class code to complete part number e.g. XLPR3A-100/5A-10P5

XLPR7A

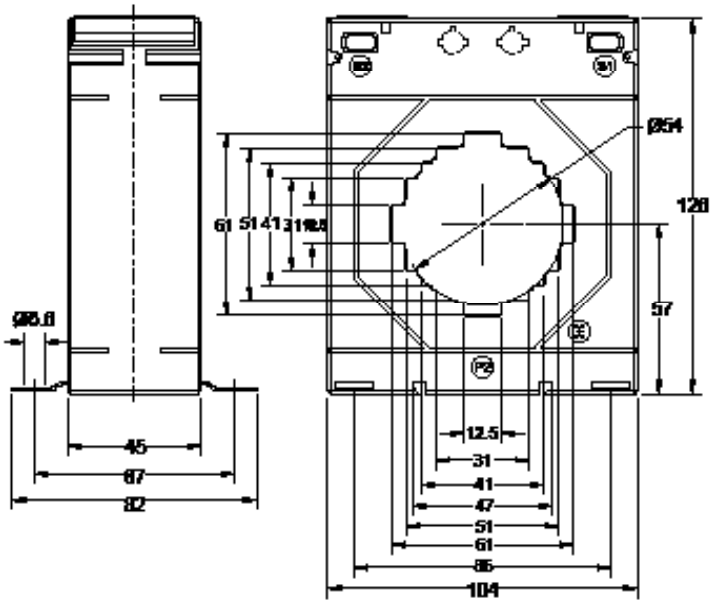

XLPR7D

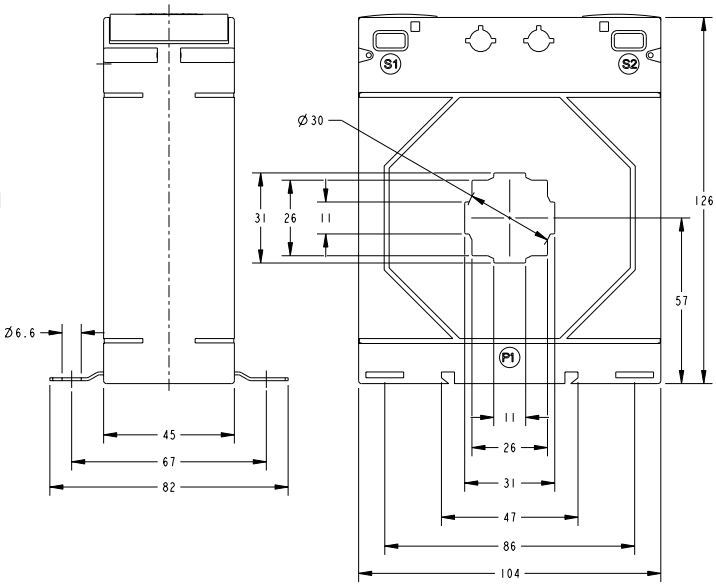

Busbar and Mounting feet fixings are supplied as standard.
DIN Rail Mounting Adapters available - Part Number XL-DRBRK-3

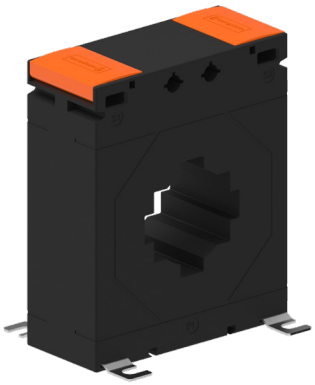

XLPR7E MODEL

Case size: 104 mm wide x 45 mm deep x 126 mm high
Aperture: 51 x 12.5 mm, 41 x 31 mm - Ø 41 mm
Primary Rating: 150 - 1000A
Secondary Rating: 5A as below, 1A Ratio's available.
Change part number to include 1A e.g. XLPR3A-100/1A-10P5

Model type	Primary current	Accuracy			
		5P5	10P5	5P10	10P10
XLPR7E-150/5A-**	150A	2.5VA	2.5VA	-	-
XLPR7E-200/5A-**	200A	5VA	5VA	1.5VA	1.5VA
XLPR7E-250/5A-**	250A	5VA	7.5VA	2.5VA	2.5VA
XLPR7E-300/5A-**	300A	7.5VA	7.5VA	2.5VA	2.5VA
XLPR7E-400/5A-**	400A	7.5VA	7.5VA	2.5VA	2.5VA
XLPR7E-500/5A-**	500A	10VA	10VA	2.5VA	2.5VA
XLPR7E-600/5A-**	600A	10VA	10VA	2.5VA	2.5VA
XLPR7E-750/5A-**	750A	10VA	10VA	5VA	5VA
XLPR7E-800/5A-**	800A	10VA	10VA	5VA	5VA
XLPR7E-1000/5A-**	1000A	10VA	10VA	5VA	5VA

-**Add class code to complete part number e.g. XLPR3A-100/5A-10P5

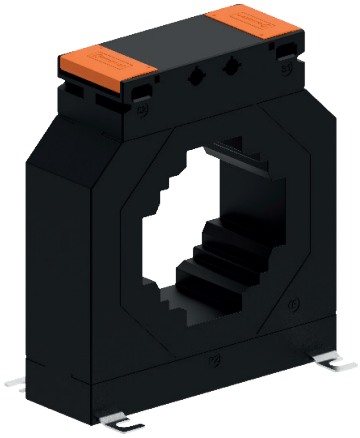

XLPR8A

Case size: 140 mm wide x 45 mm deep x 155 mm high
Aperture: 81 x 31 mm - 61 x 51 mm - Ø 73 mm
Primary Rating: 200 - 2500A
Secondary Rating: 5A as below, 1A Ratio's available.
Change part number to include 1A e.g. XLPR3A-100/1A-10P5

Model type	Primary current	Accuracy			
		5P5	10P5	5P10	10P10
XLPR8A-200/5A-**	200A	5VA	5VA	2.5VA	2.5VA
XLPR8A-250/5A-**	250A	5VA	5VA	2.5VA	2.5VA
XLPR8A-300/5A-**	300A	7.5VA	7.5VA	3.75VA	3.75VA
XLPR8A-400/5A-**	400A	10VA	10VA	5VA	5VA
XLPR8A-500/5A-**	500A	10VA	10VA	5VA	5VA
XLPR8A-600/5A-**	600A	10VA	10VA	5VA	5VA
XLPR8A-750/5A-**	750A	10VA	10VA	5VA	5VA
XLPR8A-800/5A-**	800A	10VA	10VA	5VA	5VA
XLPR8A-1000/5A-**	1000A	10VA	10VA	5VA	5VA
XLPR8A-1200/5A-**	1200A	10VA	10VA	5VA	5VA
XLPR8A-1250/5A-**	1250A	10VA	10VA	5VA	5VA
XLPR8A-1500/5A-**	1500A	15VA	15VA	7.5VA	7.5VA
XLPR8A-1600/5A-**	1600A	15VA	15VA	7.5VA	7.5VA
XLPR8A-2000/5A-**	2000A	20VA	20VA	10VA	10VA
XLPR8A-2500/5A-**	2500A	20VA	20VA	10VA	10VA

-**Add class code to complete part number e.g. XLPR3A-100/5A-10P5

XLPR7E

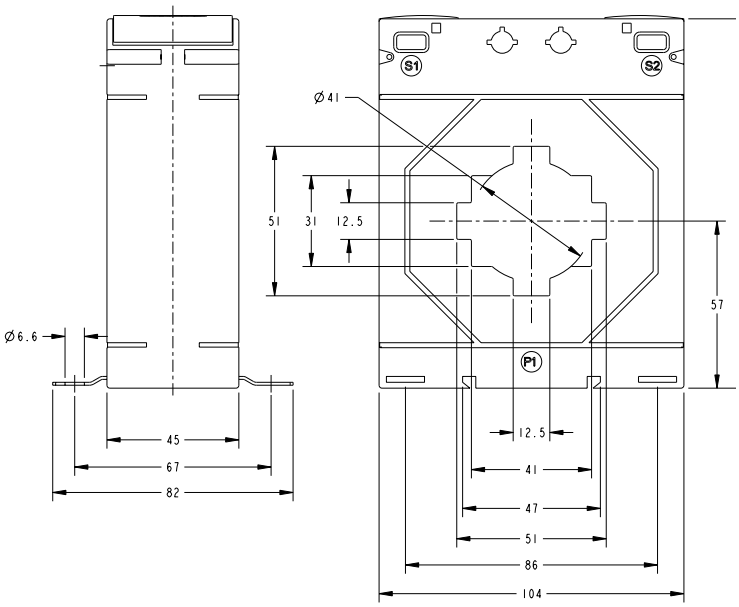

XLPR8A

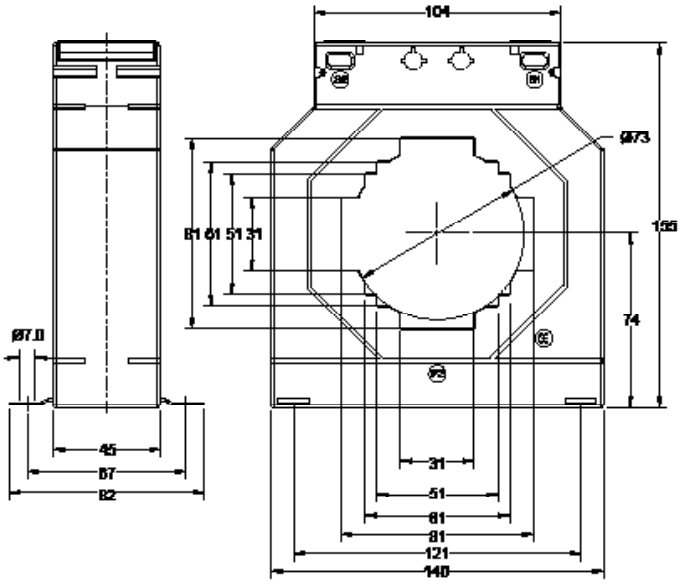

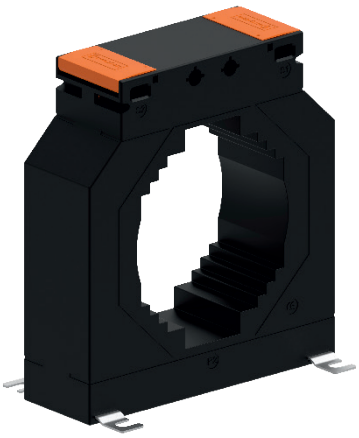

XLPR8C

Case size: 140 mm wide x 45 mm deep x 155 mm high
Aperture: 31 x 101 mm - 51 x 81 mm - 61 x 71 mm - Ø 86mm
Primary Rating: 250 - 3000A
Secondary Rating: 5A as below, 1A Ratio's available.
Change part number to incorporate 1A e.g. XLPR3A-100/1A-10P5

Model type	Primary current	Accuracy			
		5P5	10P5	5P10	10P10
XLPR8C-250/5A-**	250A	2.5VA	2.5VA	-	-
XLPR8C-300/5A-**	300A	2.5VA	2.5VA	-	-
XLPR8C-400/5A-**	400A	3.75VA	3.75VA	-	-
XLPR8C-500/5A-**	500A	5VA	5VA	-	-
XLPR8C-600/5A-**	600A	5VA	5VA	1VA	1VA
XLPR8C-750/5A-**	750A	7.5VA	7.5VA	1VA	1VA
XLPR8C-800/5A-**	800A	7.5VA	7.5VA	1VA	1VA
XLPR8C-1000/5A-**	1000A	10VA	10VA	1VA	1VA
XLPR8C-1200/5A-**	1200A	10VA	10VA	1VA	1VA
XLPR8C-1250/5A-**	1250A	10VA	10VA	1VA	1VA
XLPR8C-1500/5A-**	1500A	10VA	10VA	1.25VA	1.25VA
XLPR8C-1600/5A-**	1600A	10VA	10VA	1.25VA	1.25VA
XLPR8C-2000/5A-**	2000A	10VA	10VA	1.25VA	1.25VA
XLPR8C-2500/5A-**	2500A	10VA	10VA	1.25VA	1.25VA
XLPR8C-3000/5A-**	3000A	10VA	10VA	1.25VA	1.25VA

-**Add class code to complete part number e.g. XLPR3A-100/5A-10P5

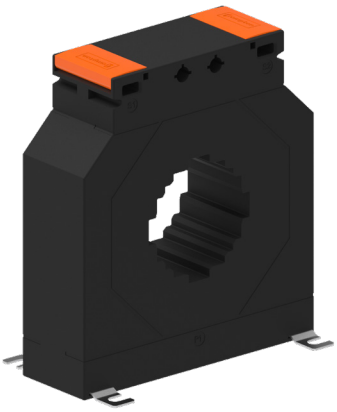

XLPR8D MODEL

Case size: 140 mm wide x 45 mm deep x 155 mm high
Aperture: 61 x 12.5 mm, 51 x 31 mm, 41 x 41 mm - Ø 54mm
Primary Rating: 200 - 2000A
Secondary Rating: 5A as below, 1A Ratio's available.
Change part number to incorporate 1A e.g. XLPR3A-100/1A-10P5

Model type	Primary current	Accuracy					
		5P5	10P5	5P10	10P10	5P20 (5A / 1A)	10P20 (5A / 1A)
XLPR8D-200/5A-**	200A	7.5VA	7.5VA	2.5VA	2.5VA	-	-
XLPR8D-250/5A-**	250A	7.5VA	7.5VA	2.5VA	2.5VA	1VA / 1VA	N/A / 1VA
XLPR8D-300/5A-**	300A	10VA	10VA	3.75VA	3.75VA	1.25VA / 1.25VA	N/A / 1.25VA
XLPR8D-400/5A-**	400A	10VA	10VA	5VA	5VA	1.5VA / 1.75VA	N/A / 1.5VA
XLPR8D-500/5A-**	500A	10VA	10VA	5VA	5VA	1.75VA / 1.75VA	N/A / 1.75VA
XLPR8D-600/5A-**	600A	12.5VA	12.5VA	5VA	5VA	1.75VA / 2.5VA	N/A / 1.75VA
XLPR8D-750/5A-**	750A	12.5VA	12.5VA	5VA	5VA	1.75VA / 2.75VA	N/A / 1.75VA
XLPR8D-800/5A-**	800A	12.5VA	12.5VA	5VA	5VA	1.75VA / 2.75VA	N/A / 1.75VA
XLPR8D-1000/5A-**	1000A	12.5VA	12.5VA	7.5VA	7.5VA	N/A / 1.25VA	-
XLPR8D-1200/5A-**	1200A	12.5VA	12.5VA	7.5VA	7.5VA	N/A / 1.5VA	-
XLPR8D-1250/5A-**	1250A	12.5VA	12.5VA	7.5VA	7.5VA	N/A / 1.75VA	-
XLPR8D-1500/5A-**	1500A	15VA	15VA	10VA	10VA	N/A / 1VA	-
XLPR8D-1600/5A-**	1600A	15VA	15VA	10VA	10VA	N/A / 1VA	-
XLPR8D-2000/5A-**	2000A	20VA	20VA	12.5VA	12.5VA	-	-

-**Add class code to complete part number e.g. XLPR3A-100/5A-10P5

XLPR8C

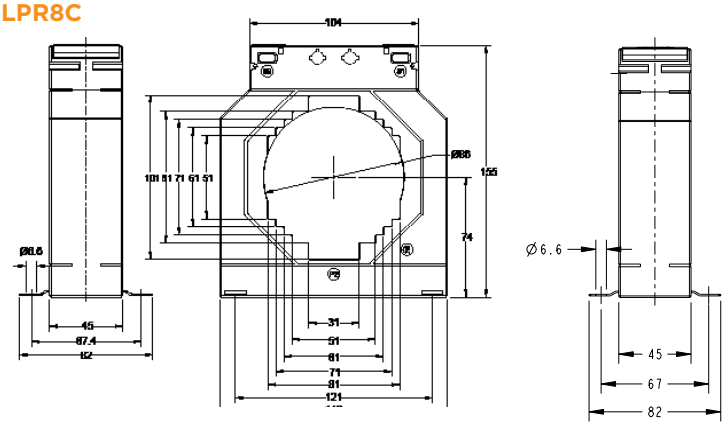

XLPR8D

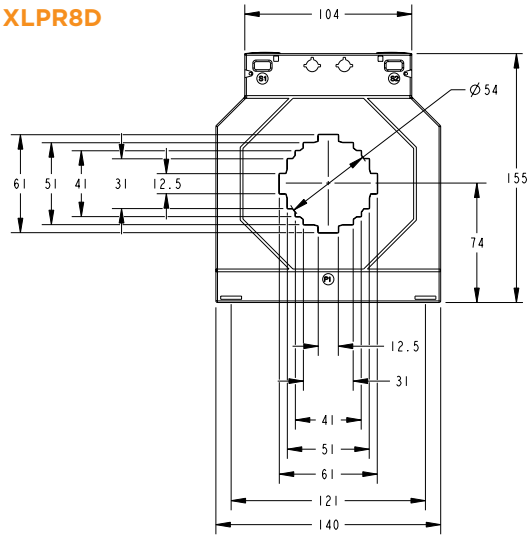

Busbar and Mounting feet fixings are supplied as standard.
DIN Rail Mounting Adapters available - Part Number XL-DRBRK-3

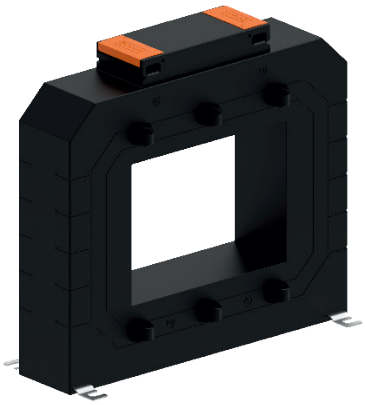

XLPR10A MODEL

Case size: 225 mm wide x 50 mm deep x 206 mm high
Aperture: 125 x 93 mm
Primary Rating: 600 - 5000A
Secondary Rating: 5A as below, 1A Ratio's available.
Change part number to incorporate 1A e.g. XLPR3A-100/1A-10P5

Model type	Primary current	Accuracy				
		5P5	10P5	5P10	10P10	5P20 (5A / 1A)
XLPR10A-600/5A-**	600A	5VA	5VA	-	-	-
XLPR10A-750/5A-**	750A	5VA	10VA	-	-	-
XLPR10A-1000/5A-**	1000A	10VA	10VA	-	-	-
XLPR10A-1200/5A-**	1200A	10VA	15VA	1.5VA	2.5VA	N/A / 1VA
XLPR10A-1250/5A-**	1250A	10VA	15VA	1.5VA	2.5VA	N/A / 1VA
XLPR10A-1500/5A-**	1500A	15VA	15VA	2.5VA	2.5VA	N/A / 1VA
XLPR10A-1600/5A-**	1600A	15VA	15VA	2.5VA	2.5VA	N/A / 1VA
XLPR10A-2000/5A-**	2000A	15VA	15VA	3.75VA	5VA	N/A / 1.5VA
XLPR10A-2500/5A-**	2500A	15VA	15VA	5VA	7.5VA	N/A / 1.75VA
XLPR10A-3000/5A-**	3000A	15VA	20VA	5VA	7.5VA	N/A / 2.5VA
XLPR10A-4000/5A-**	4000A	15VA	20VA	5VA	7.5VA	N/A / 2.5VA
XLPR10A-5000/5A-**	5000A	20VA	20VA	5VA	10VA	

-**Add class code to complete part number e.g. XLPR3A-100/5A-10P5

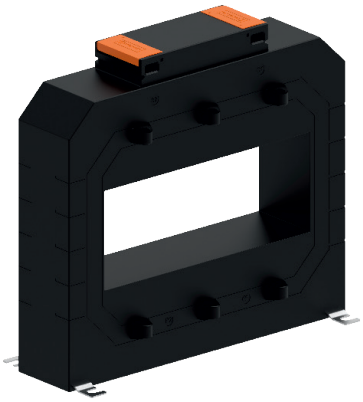

XLPR10B MODEL

Case size: 225 mm wide x 50 mm deep x 206 mm high
Aperture: 167 x 66 mm
Primary Rating: 1000 -6000A
Secondary Rating: 5A as below, 1A Ratio's available.
Change part number to incorporate 1A e.g. XLPR3A-100/1A-10P5

Model type	Primary current	Accuracy			
		5P5	10P5	5P10	10P10
XLPR10B-1000/5A-**	1000A	5VA	5VA	-	-
XLPR10B-1200/5A-**	1200A	5VA	7.5VA	1.5VA	2.5VA
XLPR10B-1250/5A-**	1250A	5VA	7.5VA	1.5VA	2.5VA
XLPR10B-1500/5A-**	1500A	5VA	7.5VA	2.5VA	3.75VA
XLPR10B-1600/5A-**	1600A	5VA	7.5VA	2.5VA	3.75VA
XLPR10B-2000/5A-**	2000A	7.5VA	12.5VA	3.75VA	5VA
XLPR10B-2500/5A-**	2500A	10VA	15VA	3.75VA	7.5VA
XLPR10B-3000/5A-**	3000A	15VA	20VA	7.5VA	10VA
XLPR10B-4000/5A-**	4000A	20VA	20VA	7.5VA	12.5VA
XLPR10B-5000/5A-**	5000A	20VA	20VA	7.5VA	12.5VA
XLPR10B-6000/5A-**	6000A	20VA	20VA	7.5VA	12.5VA

-**Add class code to complete part number e.g. XLPR3A-100/5A-10P5

XLPR10A

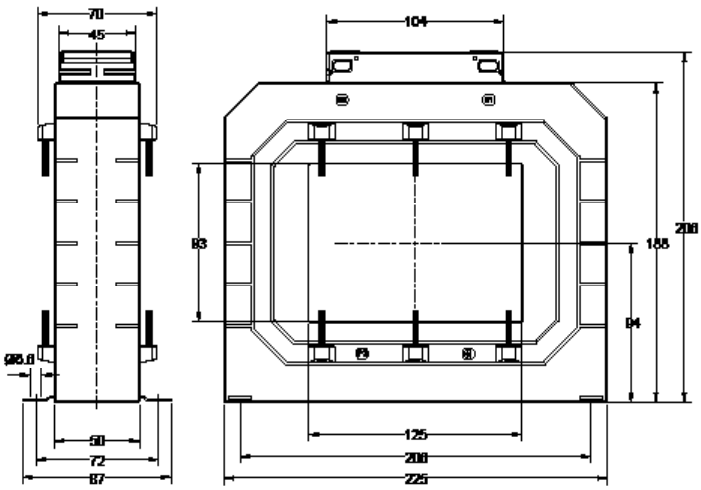

XLPR10B

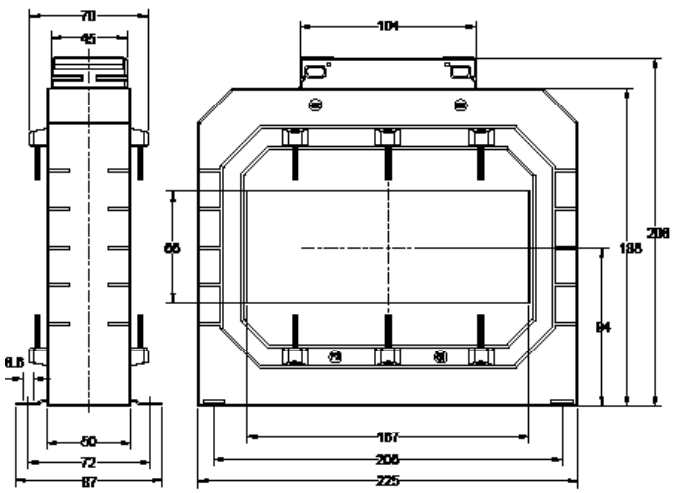

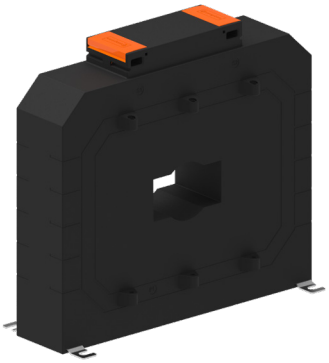

XLPR10C MODEL

Case size: 225 mm wide x 50 mm deep x 206 mm high
Aperture: 61 x 31 mm - Ø 42.5mm
Primary Rating: 100 - 2000A
Secondary Rating: 5A as below, 1A Ratio's available.
Change part number to incorporate 1A e.g. XLPR3A-100/1A-10P5

Model type	Primary current	Accuracy				
		5P5	10P5	5P10	10P10	5P20 (5A / 1A)
XLPR10C-100/5A-**	100A	10VA	10VA	-	-	1.5VA / 1.5VA
XLPR10C-150/5A-**	150A	10VA	15VA	5VA	-	2.5VA / 2.5VA
XLPR10C-200/5A-**	200A	10VA	15VA	7.5VA	10VA	2.75VA / 3.5VA
XLPR10C-250/5A-**	250A	15VA	15VA	10VA	15VA	3.75VA / 3.75VA
XLPR10C-300/5A-**	300A	15VA	15VA	10VA	15VA	3.75VA / 3.75VA
XLPR10C-400/5A-**	400A	15VA	15VA	15VA	15VA	3.75VA / 5VA
XLPR10C-500/5A-**	500A	15VA	15VA	15VA	15VA	5VA / 5VA
XLPR10C-600/5A-**	600A	15VA	15VA	15VA	15VA	5VA / 7.5VA
XLPR10C-750/5A-**	750A	15VA	15VA	15VA	15VA	7.5VA / 7.5VA
XLPR10C-800/5A-**	800A	15VA	15VA	15VA	15VA	7.5VA / 10VA
XLPR10C-1000/5A-**	1000A	15VA	15VA	15VA	15VA	7.5VA / 10VA
XLPR10C-1200/5A-**	1200A	15VA	15VA	15VA	15VA	10VA / 10VA
XLPR10C-1250/5A-**	1250A	15VA	15VA	15VA	15VA	10VA / 12.5VA
XLPR10C-1500/5A-**	1500A	15VA	15VA	15VA	15VA	7.5VA / 10VA
XLPR10C-2000/5A-**	2000A	15VA	15VA	15VA	15VA	7.5VA / 12.5VA

-**Add class code to complete part number e.g. XLPR3A-100/5A-10P5

XLPR10C

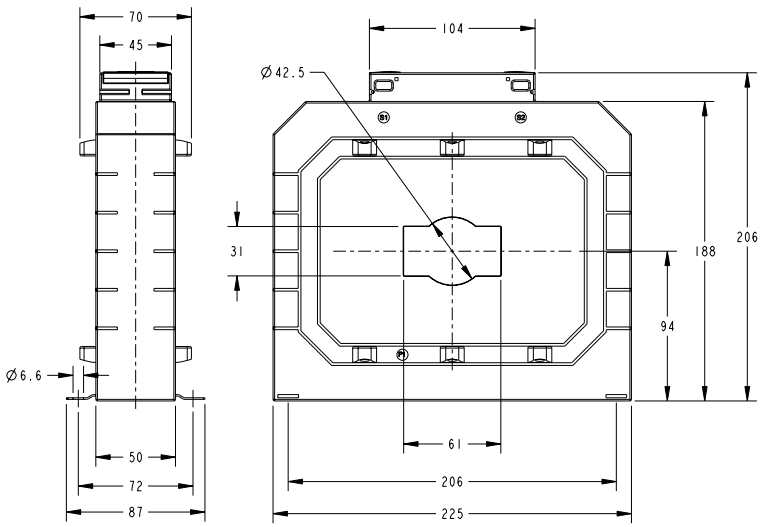

	XL3 model		XL4 model		XL5 model		XL7 model		
	XLPR3A	XLPR3B	XLPR4A	XLPR4C	XLPR5A	XLPR5B	XLPR7A	XLPR7D	XLPR7E
Inside Dia Ø (mm)	22.5	-	20.4	35	36	46	54	30	41
Busbars (mm)	-	-	-	-	-	-	60 X 10	31 X 11	51 X 12.5
	-	20 X 10	15 x 15	40 X 10	40 X 10	50 X 10	50 X 30	26 X 26	41 X 31
	-	15 X 15	20 X 10	30 X 30	30 X 30	40 X 30	40 X 40		
Height (mm)	78	78	98	98	110	110	126	126	126
Width (mm)	62	62	74	74	86	86	104	104	104
Depth (mm)	40	40	45	45	45	45	45	45	45
With additional DIN rail mounting kit	✓	✓	✓	✓	✓	✓	✓	✓	✓
Panel or Wall Mounting	✓	✓	✓	✓	✓	✓	✓	✓	✓
Busbar Mounting	-	✓	✓	✓	✓	✓	✓	✓	✓
Terminal Cover	✓	✓	✓	✓	✓	✓	✓	✓	✓
Primary Current	100A→300A	100A→200A	200A→400A	120A→750A	50A→1000A	100A→1250A	100A→1600A	50A→600A	150A→1000A
Max screw torque setting (Nm)	0.75	0.75	0.75	0.75	0.75	0.75	0.75	0.75	0.75

	XL8 model			XL10 model		
	XLPR8A	XLPR8C	XLPR8D	XLPR10A	XLPR10B	XLPR10C
Inside Dia Ø (mm)	73	86	54	-	-	42.5
Busbars (mm)	-	30 X 100	61 X 12.5	-	-	61 X 31
	80 X 30	50 X 80	51 X 31	125 X 90	167 X 66	
	60 X 50	60 X 70	41 X 41	-	-	
Height (mm)	155	155	155	206	206	206
Width (mm)	140	140	140	225	225	225
Depth (mm)	45	45	45	50	50	50
With additional DIN rail mounting kit	-	-		-	-	
Panel or Wall Mounting	✓	✓	✓	✓	✓	✓
Busbar Mounting	✓	✓	✓	✓	✓	✓
Terminal Cover	✓	✓	✓	✓	✓	✓
Primary Current	200A→2000A	200A→3000A	200A→2000A	600A→6000A	1000A→7500A	200A→2000A
Max screw torque setting (Nm)	0.75	0.75	0.75	0.75	0.75	0.75

EBONY EXCEL RANGE ACCESSORIES

Busbar Mounting Kits are supplied as standard with each Current Transformer.

The kit contains a selection of the below items based on what is required for each individual Current Transformer.

Busbar Mounting Kit Items			
M4 Busbar mounting Screws		Swivels	
Push in metal feet		Shoe for M4 Busbar mounting Screws	

Extra Busbar Mounting Kits are available to order, please see the below table

Current Transformer Model Type	Mounting Kit Order Code	Items in each Mounting Kit
XLPR3A, XLPR3B, XLPR4A, XLPR5A, XLPR5B	XL-KIT-003	2 x Busbar mounting screws M4 x 45mm 2 x Push in metal feet 2 x Swivels 2 x Shoe for self tapping M4 screws
XLPR7A, XLPR7D, XLPR7E	XL-KIT-005	4 x Busbar mounting screws M4 x 45mm 2 x Push in metal feet 2 x Swivels 4 x Shoe for self tapping M4 screws
XLPR8A, XLPR8C, XLPR8D	XL-KIT-006	4 x Busbar mounting screws M4 x 75mm 2 x Push in metal feet 4 x Swivels 4 x Shoe for self tapping M4 screws
XLPR10A, XLPR10B, XLPR10C	XL-KIT-008	6 x Busbar mounting screws M4 x 75mm 2 x Push in metal feet 6 x Shoe for self tapping M4 screws

DIN Rail Mounting Adapters (available seperately)

Current Transformer Model Type	Order Code	
XLPR3A, XLPR3B, XLPR4A, XLPR4C, XLPR5A, XLPR5B XLPR7A, XLPR7D, XLPR7E	XL-DRBRK-3	

Explanation of technical terms used for CT's

Accuracy Class:- A designation assigned to a current transformer the errors of which remain within specified limit under prescribed conditions of use.

Rated Burden:- The impedance of the secondary circuit on which the accuracy requirements are based. It is usually expressed as apparent power (in VA), at the rated secondary current and at a specified power factor.

Rated Output:- The value of the apparent power (in volt-amperes at a specified power factor) which the current transformer is intended to supply to the secondary circuit at the rated secondary current and with rated burden connected to it.

Highest System Voltage:- The highest rms line to line voltage which can be sustained under normal operating conditions at any time and at any point on the system. It excludes temporary voltage variations due to fault condition and the sudden disconnection of large loads.

Rated Insulation Level:- That combination of voltage values (power frequency and lightning impulse, or where applicable, lightning and switching impulse) which characterizes the insulation of a transformer with regard to its capability to withstand by dielectric stresses. For low voltage transformer the test voltage 4kV, at power-frequency, applied during 1 minute.

Rated Short Time Thermal Current (Ith):- The RMS value of the primary current which the current transformer will withstand for a rated time, with their secondary winding short circuits without suffering harmful effects.

Rated Dynamic Current (Idyn):- The peak value of the primary current which a current transformer will withstand, without being damaged electrically for mechanically by the resulting electromagnetic forces, the secondary winding being short-circuited.

Rated Continuous Thermal Current:- The value of current which can be permitted to flow continuously in the primary winding, the secondary windings being connected to the rated burdens, without the temperature rise exceeding the specified values.

Instrument Security Factor (ISF):- Instrument Security Factor is the ratio of Instrument Limit Primary Current to the rated Primary Current. Instrument Limit Current of a metering Current Transformer is the maximum value of primary current beyond which Current Transformer core becomes saturated. Instrument Security Factor of CT is the significant factor for choosing the metering Instruments which to be connected to the secondary of the CT. Security or Safety of the measuring unit is better, if ISF is low.

IEC61869-2 commonly define protection current transformers in terms of composite error at an accuracy limit factor. In simple terms this means how accurate the current transformer will remain when the primary current flowing is many times higher than in normal conditions i.e. in a fault situation.
The classification of protection current transformers follows the following simple formula:

"10 P 10"

Number before letter indicates composite error achieved in percentage terms

'P' for Protection

Number after letter indicates factor of primary current up to which composite error will be achieved

TE Connectivity Ltd. is a $14 billion global technology and manufacturing leader creating a safer, sustainable, productive, and connected future. For more than 75 years, our connectivity and sensor solutions, proven in the harshest environments, have enabled advancements in transportation, industrial applications, medical technology, energy, data communications, and the home. With 80,000 employees, including more than 8,000 engineers, working alongside customers in approximately 140 countries, TE ensures that EVERY CONNECTION COUNTS. Learn more at **www.te.com** and on **LinkedIn, Facebook, WeChat** and **Twitter**.

Generation

- Conventional Power
- Nuclear Power
- Wind/Solar
- Hydro-electric

Transmission & Distribution

- Substation
- Underground
- Overhead
- Street Lighting

Industry

- Mining
- Petrochemical
- Railway
- Shipbuilding

WHEREVER ELECTRICITY FLOWS, YOU'LL FIND TE ENERGY

te.com/energy

FOR MORE INFORMATION:
TE Technical Support Centres

USA:	+1 800 327 6996
UK:	+44 870 870 7500
Australia:	+61 1300 656 090
Singapore:	+65 6590 5151
Hong Kong:	+852 2790 9609

crompton-instruments.com

© 2018 TE Connectivity Ltd. family of companies. All Rights Reserved. EPP-3257-06/21

TE Connectivity, the TE connectivity (logo) and Crompton Instruments are trademarks of the TE Connectivity Ltd. family of companies. Other logos, product and Company names mentioned herein may be trademarks of their respective owners. While TE has made every reasonable effort to ensure the accuracy of the information in this brochure, TE does not guarantee that it is error-free, nor does TE make any other representation, warranty or guarantee that the information is accurate, correct, reliable or current. TE reserves the right to make any adjustments to the information contained herein at any time without notice. TE expressly disclaims all implied warranties regarding the information contained herein, including, but not limited to, any implied warranties of merchantability or fitness for a particular purpose. The dimensions in this brochure are for reference purposes only and are subject to change without notice. Specifications are subject to change without notice. Consult TE for the latest dimensions and design specifications.